SINGER
112W138

From the library of: Superior Sewing Machine & Supply LLC

Form 2682w
(141)
Printed in U. S. A.

LIST OF PARTS

MACHINE No. 112w138

THE SINGER MANUFACTURING COMPANY

INDEX

	Page
Accessories	15
Bobbin Winder	15
Foot Lifter	17
Grinder	18
Knee Lifter	16
Machine No.112w138	5
Miscellaneous Parts	18
Numerical List of Parts	19
Thread Unwinder	17

From the library of: Superior Sewing Machine & Supply LLC

INSTRUCTIONS FOR ORDERING

In ordering from this list, use ONLY the PART number in the FIRST column.

The number stamped on a Sewing Machine Part is the number of the Single Part only, except when the part includes Set Screws, Clamping Screws, Studs and Rollers Spun on, Small Wires riveted, or Parts soldered together, etc.,which it is necessary to furnish in combination.

Every combination of parts sent out has its specific number which, although not stamped on Parts (except in above case), must be used when ordering the combination.

Each number always indicates the SAME PART in whatever list it appears, or for whatever Machine.

The letters after some of the numbers indicate the style of finish only, as follows:

A. Hardened, Polished, Nickel Plated and Buffed.
B. Polished, Nickel Plated and Buffed.
C. Hardened only.
D. Polished only.
E. Soft, not polished.
F. Hardened and Polished.
H. Blued.
J. Nickel Plated only.
R. Merlized.
X. Black Oxide.
XC. Hardened and Black Oxide.
Y. Blade Nickel only.

These letters MUST BE USED when they appear in the list and AFTER the number, as in the list.

In this series:
200001 to 201500 and 350001 to 351500 are Screw Numbers.
201501 to 201800 and 351501 to 351800 are Nut Numbers.
201801 to 202000 and 351801 to 352000 are Roller Numbers.
202001 to 350000 are Numbers of Machine Parts.

The figures in the second column refer only to the plate in which the illustration of the part is shown and are NOT TO BE USED in ordering.

Two or more numbers over a cut indicate that the difference between such parts is not visible in an illustration.

Parts marked with an asterisk (*) are furnished when repairs are made at the factory.

LIST OF PARTS COMPLETE
FOR

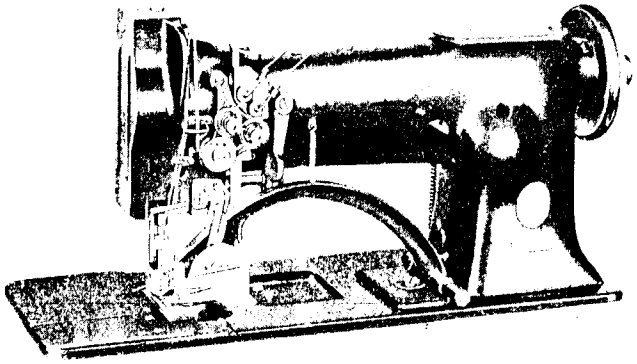

MACHINE No. 112w138

HIGH SPEED. DROP FEED.
VERTICAL TRIMMER. BINDER.
HOOK AT LEFT OF THE NEEDLE.

MADE IN 1/8 INCH GAUGE. THE TRIMMING MARGIN IS CONTROLLED BY THE WIDTH OF THE BINDING.

No.	Plate	Name
*248176	-----	Arm with 202135 and 201160E
224002	16270	" Cap
200278H	16270	" " Screw
202248	16270	" " " Washer
204235	16260	" Position Pin (2)
200004E	16260	" Screw (3)
202005	16260	" " Washer (3)
224137	16270	" Shaft with 200357E and 224392
240802	16270	" " Bushing (back) with 202244
202244	16270	" " " " Oil Packing (wick)
200338C	16270	" " " " Set Screw
207080	16270	" " " (front) with 202244
202244	16270	" " " " Oil Packing (wick)

From the library of: Superior Sewing Machine & Supply LLC

No.	Plate	Name
200502B	16270	Arm Shaft Bushing (front) Oil Packing Thumb Screw
200341C	16270	Arm Shaft Bushing (front) Set Screw
224103	16260	" " Connection Belt
224200	16260	" " " " Pulley with 200327C,200602E and two 202253
200602E	16260	Arm Shaft Connection Belt Pulley Position Screw
200327C	16260	Arm Shaft Connection Belt Pulley Set Screw
202253	16260	Arm Shaft Connection Belt Pulley Spring Flange
224138	16271	Arm Shaft Connection Belt Timing Collar with 200113F
200113F	16271	Arm Shaft Connection Belt Timing Collar Set Screw
224139	16271	Arm Shaft Connection Belt Timing Plate
200164B	16271	" " " " " " Screw (2)
224392	16270	Arm Shaft Oil Packing (wick)
200357E	16270	" " " " Stop Screw
248177	16279	Attachment Slide Plate with 200393C
248178	16279	" " " Extension
200585H	16279	" " " " Screw
200393C	16279	" " " Lock Screw
248179	16279	Attachment Slide Plate and Extension complete,Nos.248177,248178 and two 200585H
235096	16270	Balance Wheel (disc) (belt groove 2-1/2 in.diam.) with 200328C and 200335C
200328C	16270	Balance Wheel Position Screw
200335C	16270	" " Set Screw
*248180	-----	Bed with 203376
202258	16260	" Hinge Connection (2)
200570E	16260	" " " Screw (4)
54897	16271	" Oil Cup
248181	16279	" Slide (back) with 200804E
200462B	16279	" " " Locking Thumb Screw
264642	16279	" " " Stop with 200462B
200056E	16279	" " " " Screw (2)
248182	16279	" " (front)
248183	16279	" " Extension
200585H	16279	" " " Screw
248184	16279	Bed Slide (front) and Extension complete, Nos.248182,248183 and four 200585H
259478	16279	Binder and Folder,for 3/4,13/16 or 7/8 in. binding,state size required

No.	Plate	Name
200804E	16279	Binder and Folder Screw Stud
201560B	16279	" " " Thumb Nut
259250	16279	" " " " " Washer
203470	16272	Bobbin (2)
*233764	-----	" Case
*248185	-----	" "
203648	16272	" " Latch
*202056	-----	" " " Pin
203473	16272	" " " Plunger
203474	16272	" " " Spring
241674	16272	" " Oiling Felt
241675	16272	" " " " Retainer
350405C	16272	" " " " " Screw
224004	16274	" " Opener
224005	16274	" " " Lever with 201349C, 201542C and 203101
201349C	16274	Bobbin Case Opener Lever Driving Screw Stud
201542C	16274	Bobbin Case Opener Lever Driving Screw Stud Nut
203101	16274	Bobbin Case Opener Lever Driving Screw Stud Oil Packing (wick)
265088	16274	Bobbin Case Opener Lever Hinge Stud with 202277
202277	16274	Bobbin Case Opener Lever Hinge Stud Oil Packing (wick)
200364C	16274	Bobbin Case Opener Lever Hinge Stud Set Screw
223623	16274	Bobbin Case Opener Lever Link
200118D	16274	" " " Screw
203214	16272	" " Tension Spring
235123	16273	" " " "
200984C	16272	" " " " Regulating Screw
200594C	16272	" " " " Screw
203216	16272	" " Washer (cloth)
233765	16272	Bobbin Case (left) complete,Nos.200594C, 200984C,202056,203214,203216,203473, 203474,203648,233764,241674,241675 and two 350405C
248186	16273	Bobbin Case (right) complete,Nos.200594C, 200984C,202056,203216,203473,203474, 203648,235123,241674,241675,248185 and two 350405C
210911	16279	Face Plate
202135	16279	" " Position Pin
200473B	16279	" " Thumb Screw
224050	16261	Feed Bar with 200336E and 201535E

From the library of: Superior Sewing Machine & Supply LLC

No.	Plate	Name
224051	16261	Feed Bar 224050 with 200040C,224052 and 225837
350393C	16261	Feed Bar Hinge Screw (driving)
201518E	16261	" " " " Nut
248187	16281	" Dog
200106E	16281	" " Screw (2)
200336E	16261	" " Support Screw
201535E	16261	" " " " Nut
224106	16260	" Driving Connection with 200049D and 202277
201407C	16260	Feed Driving Connection Hinge Screw
201517E	16260	" " " " " Nut
206758	16260	" " " " " Oil Packing (wick)
202277	16260	Feed Driving Connection Oil Packing (wick)
200049D	16260	Feed Driving Connection Pinch Screw
202300	16260	" " Eccentric Regulating Bracket
224140	16260	" " " " " 202300 with 224200,two each 201408C and 201525E
201408C	16260	Feed Driving Eccentric Regulating Bracket Hinge Screw
201525E	16260	Feed Driving Eccentric Regulating Bracket Hinge Screw Nut
202301	16260	Feed Driving Eccentric Regulating Bracket Plunger
202595	16260	Feed Driving Eccentric Regulating Bracket Plunger Spring
200607C	16260	Feed Driving Eccentric Regulating Bracket Plunger Spring Stop Screw
201408C	16260	Feed Driving Eccentric Regulating Bracket Stop Screw
201525E	16260	Feed Driving Eccentric Regulating Bracket Stop Screw Nut
200429C	16260	Feed Driving Eccentric Regulating Screw
200383C	16260	" " " " " Check Screw
223650	16261	Feed Driving Rock Shaft
223651	16261	" " " " 223650 with 201518E 224051 and 350393C
224141	16261	Feed Driving Rock Shaft Crank with 200019E
200019E	16261	" " " " " Pinch Screw
202625	16261	" " " " Stop Collar with two 200383C (2)
200383C	16261	Feed Driving Rock Shaft Stop Collar Set Screw

No.	Plate	Name
224154	16271	Feed Lifting Cam with 201220C
224052	16261	" " " Fork with 200173D and 223655
200040C	16261	Feed Lifting Cam Fork Screw
225837	16261	" " " " " Washer
223655	16261	" " " Oiling Felt
200173D	16261	" " " " " Screw
201220C	16271	" " " Set Screw
224142	16270	" Regulating Spindle with 202311,202443 and 202619
*202311	-----	Feed Regulating Spindle Head
202443	16270	" " " " Pin
202619	16270	" " " " Position Pin
*203511	-----	Hook (sewing)
203512	16273	" 203511 with 203513 and two 201253F
248198	16273	" 203512 with 200555H,203254 and 248199
247520	16272	" 203511 with 224100 and two 201253F
248189	16272	" 247520 with 200555H,203254 and 248198
248190	16272	Hook and Bobbin Case (left) complete,Nos. 233765 and 248189
248191	16273	Hook and Bobbin Case (right) complete, Nos.248186 and 248188
223867	16271	Hook Driving Gear (spiral) with 200362C and 201222C (2)
201222C	16271	Hook Driving Gear Position Screw
200362C	16271	" " " Set Screw
224021	16274	" " Pinion (spiral) with two 200382C
200382C	16274	Hook Driving Pinion Set Screw
224022	16274	" " " Thrust Washer
224110	16271	" " Shaft
224111	16271	" " " Bushing with 202244
202244	16271	" " " " Oil Packing (wick)
200327C	16271	Hook Driving Shaft Bushing Set Screw
224112	16271	" " " Connection Belt Pulley with 202253 and two 201254C
201254C	16271	Hook Driving Shaft Connection Belt Pulley Set Screw
202253	16271	Hook Driving Shaft Connection Belt Pulley Spring Flange
224100	16272	Hook Gib (left)
203513	16273	" " (right)
201253F	16272	" " Screw
223849	16274	" Saddle (left) with 200009E
224023	16274	" " 223849 with 200364C,200446C, 224019 and 224020

From the library of: Superior Sewing Machine & Supply LLC

No.	Plate	Name
248192	16275	Hook Saddle (right) with 200009E
248193	16275	" " 248192 with 200364C,200446C, 224019 and 224020
223680	16271	Hook Saddle Bearing (left)
200327C	16271	" " " " Set Screw
223681	16271	" " " (right)
200335C	16271	" " " " Set Screw
248226	16271	" " Gear Guard
200976D	16271	" " " " Screw (2)
200009E	16274	" " Pinch Screw
200006E	16274	" " Screw (2)
225585	16274	" " " Washer (left)
226398	16275	" " " " (right)
248196	16274	Hook Saddle (left) complete,Nos.200118D, 200364C,223623,224004,224005,224021 to 224023,248190 and 265088
248197	16275	Hook Saddle (right) complete,Nos.224021, 224022,248191 and 248193
248198	16272	Hook Socket (left)
248199	16273	" " (right)
224019	16274	" " Bushing (lower) (bronze)
200364C	16274	" " " " Set Screw
224020	16274	" " " (upper) (bronze)
200446C	16274	" " " " Position Screw
200555H	16272	" " Screw
203254	16272	" Washer
240067	16279	Knee Lifter Connection Lever
200262H	16279	" " " " Hinge Screw
223684	16279	" " " " Lifting Rod with 202302
202302	16279	Knee Lifter Connection Lever Lifting Rod Cotter Pin
206628	16279	Knee Lifter Connection Lever Lifting Rod Spring
227227	16279	Knee Lifter Connection Lever Lifting Rod Spring Collar with 200113F
200113F	16279	Knee Lifter Connection Lever Lifting Rod Spring Collar Set Screw
240068	16279	Knee Lifter Lifting Lever
200262H	16279	" " " " Hinge Screw
248200	16276	Knife
248232	16276	" Arm with 201160E,201531E,350037C, 350266C,two each 200076D and 202603
248202	16276	Knife Arm Base Plate with two each 200410C and 201617C
248233	16276	Knife Arm Base Plate 248202 with 248232
207011	16276	" " " " Position Plate

No.	Plate	Name
200574E	16276	Knife Arm Base Plate Position Plate Screw
200540E	16276	" " " " Screw
202622	16276	" " " " " Washer
200410C	16276	" " Screw Center
201617C	16276	" " " " Nut
204443	16276	" " Spring
201160E	16276	" " " Screw Eye
350266C	16276	" " Stop Screw
201531E	16276	" " " " Nut
248234	16276	" " Support
248235	16276	" " " Bracket
200157B	16276	" " " " Screw (2)
200096D	16276	" " " Screw (2)
248204	16276	" Driving Bar
248205	16276	Knife Driving Bar complete,Nos.200942F, 210983,240391,248204,248207,248209,two each 200075E and 213940
224624	16276	Knife Driving Bar Slide Block
248206	16276	" " " " " Plate with two each 200397H and 270080
200577XC	16276	Knife Driving Bar Slide Block Plate Screw
200582H	16276	" " " " " " "
240391	16276	" " Link
200942F	16276	" " " Hinge Screw
350037C	16276	" " " Screw Stud
248207	16276	" " Slide
247764	16276	" " " Locking Plunger
248208	16276	" " " " " Bracket
248209	16276	" " " " " " 248208 with 247764,247768,247769 and 247787
210983	16276	Knife Driving Slide Locking Plunger Bracket Pin
200075E	16276	Knife Driving Slide Locking Plunger Bracket Screw
213940	16276	Knife Driving Slide Locking Plunger Bracket Screw Washer
247768	16276	Knife Driving Slide Locking Plunger Head
247787	16276	" " " " " " Pin
247769	16276	" " " " " Spring
200076D	16276	" Screw
202603	16276	" " Washer
248210	16276	" Throw-out Lever
200233C	16276	" " " Hinge Screw
237181	16277	Needle Bar and Holder in 1/8 in.gauge with two 200141F
202552	16277	Needle Bar Connecting Link
264718	16277	" " " " Oil Guard
201183D	16277	" " " " " " Screw
240327	16277	" " " " Stud with 203254

From the library of: Superior Sewing Machine & Supply LLC

No.	Plate	Name
202254	16277	Needle Bar Connecting Link Stud Oil Packing (wick)
200374C	16277	Needle Bar Connecting Link Stud Set Screw
200383C	16277	" " " " " " "
*206891	------	" " " Stud
202329	16277	" " " " 206891 with 200086C and 202330
202330	16277	Needle Bar Connecting Stud Oil Packing (wick)
200086C	16277	Needle Bar Connecting Stud Pinch Screw
248211	16277	" " Crank with 200335C,200374C, 200383C,200428C and 240327
203172	16277	Needle Bar Crank Friction Washer
200428C	16277	" " " Position Screw
200335C	16277	" " " Set Screw
248284	16277	" " Frame
207069	16277	" " " Position Pin
200118D	16277	" " " Screw
210910	16277	" " " Stud with 202277
202277	16277	" " " " Oil Packing (wick)
200347C	16277	" " " " Set Screw
200141F	16277	" Set Screw
208566	16278	Presser Bar with 200074F
207072	16278	" " Bushing (2)
200352C	16278	" " " Set Screw (2)
202671	16278	" " Lifter
200653C	16278	" " " Hinge Screw
207963	16278	" " Lifting Releasing Lever Bracket
200975F	16278	Presser Bar Lifting Releasing Lever Bracket Guide Screw
206608	16278	Presser Bar Lifting Releasing Lever Bracket Spring
202337	16278	Presser Bar Position Guide
202338	16278	" " " " Lever with 200086F
200086F	16278	Presser Bar Position Guide Lever Pinch Screw
200352C	16278	Presser Bar Position Guide Set Screw
207965	16279	" " Spring (flat)
210949	16278	" " " Bracket with 200086C
200086C	16278	" " " " Pinch Screw
200538C	16279	" " " Regulating Screw
200948F	16279	" " " Support Screw
202090	16281	" Foot Hinge Pin
248227	16281	" " Plate
248228	16281	" " " Spring

No.	Plate	Name
200172H	16281	Presser Foot Plate Spring Screw
200074F	16278	" " Screw
248229	16281	" " Shank
248214	16281	" " Yielding Toe
248215	16281	" " " " Spring
200174H	16281	" " " " " Screw
248230	16281	Presser Foot (hinged) complete,50 needle hole,in 1/8 in.gauge,1/8 in.margin, Nos.200172H,200174H,202090,248214, 248215 and 248227 to 248229
223881	16277	Take-up Lever
202399	16277	" " Driving Stud with 202277
202277	16277	" " " " Oil Packing (wick)
202400	16277	Take-up Lever Hinge Stud with 202423
202423	16277	" " " " Oil Packing (wick)
200363C	16277	Take-up Lever Hinge Stud Set Screw
202401	16278	" " Oiling Felt
200132E	16278	" " " " Screw
223702	16280	Tension Bracket with two each 201224B and 236060
200159F	16280	Tension Bracket Screw
248217	16280	Tension Bracket complete,Nos.200978H, 201199F,223702,223703,223706,237174, two each 200309E,204271,223438,223704 three 201572B and four 244048
244048	16280	Tension Disc
237160	16280	" " Position Pin
223703	16280	" Release Lever
235072	16278	" " " Rod
200309E	16280	" " " Screw
223704	16280	" " Plunger
204271	16280	" " Washer
223438	16280	" Spring
201224B	16280	" Stud
201572B	16280	" Thumb Nut
223706	16280	Thread Controller Disc
200978H	16280	" " " Screw
237174	16280	" " Spring
241360	16280	" " " Stop
200132E	16280	" " " " Screw
201199F	16280	" " Stud with 204925
350126C	16280	" " " Set Screw
201572B	16280	" " " Thumb Nut
204925	16280	" " " Washer
224028	16270	" Guide

From the library of: Superior Sewing Machine & Supply LLC

No.	Plate	Name
224040	16280	Thread Guide
210954	16280	" " (lower)
210955	16280	" " (upper)
200582H	16280	" " Screw (4)
270080	16276	" Retainer
200397H	16276	" " Set Screw
248219	16281	Throat Plate Body,50 needle hole,for needle sizes 14 and 15
248222	16281	Throat Plate Knife Cutting Bar,1/8 in. trimming margin
248220	16281	Throat Plate Knife Cutting Bar,3/16 in. trimming margin
248223	16281	Throat Plate complete,1/8 in.gauge,1/8 in trimming margin,Nos.248219 and 248222
248221	16281	Throat Plate complete,1/8 in.gauge,3/16 in trimming margin,Nos.248219 and 248220
200161D	16281	Throat Plate Clamp Screw
203376	16281	" " Position Pin
742F	16281	" " Screw
248231	16279	Trimming Guard
248224	16275	" " (lower)
200089E	16275	" " " Screw (2)
200139E	16279	" " Screw (2)
248225	16276	" " (upper)
200174H	16276	" " " Screw (2)

ACCESSORIES

No.	Plate	Name
203470	16272	Bobbin (10)
*225482	-----	" Case Screw Driver Blade
*225483	-----	" " " " Handle
225497	17620	Bobbin Case Screw Driver complete,Nos. 225482 and 225483
126 x 9	16277	Needles,twelve,size 16
41400	17620	Machine Rest Pin (wood)
248200	16276	Knife (3)
248222	16281	Throat Plate Knife Cutting Bar,1/8 in. trimming margin
120342	17620	Oiler (copper plated) with 120343
120343	17620	" Spout,3-1/2 in.long
225498	17620	Screw Driver (7-1/4 in.long)
225554	17620	Wrench (steel)

BOBBIN WINDER

(SWINGING AUTOMATIC, RIGHT HAND)

259428	16615	Brake (leather)
259429	16615	" Clamp
200113F	16615	" " Screw
225453	16615	Frame with 202277 and 225438
225454	16615	" Hinge Pin
202277	16615	" Oil Packing (wick)
225438	16615	" " Well Cap
225455	16615	" Spring
225456	16615	" " Plunger
225368	16615	Pulley with 200380C
200380C	16615	" Set Screw
225381	16615	Spindle
225444	16615	Stop Latch
200056E	16615	" " Screw
225458	16615	" " Thumb Lever
225459	16615	" " " " Hinge Stud
225459	16615	" " " " Joint Stud
202478	16615	" " Trip Lever
200299H	16615	" " " " Hinge Screw
225461	16615	Tension Bracket with 201499B
200082D	16615	" " Screw
228026	16615	" " " Washer

From the library of: Superior Sewing Machine & Supply LLC

No.	Plate	Name
2102	16615	Tension Disc
13710	16615	" Spring
201499B	16615	" Stud
201572B	16615	" " Thumb Nut
225462	16615	Bobbin Winder Tension Bracket complete, Nos.13710,201572B,225461 and two 2102
259430	16615	Bobbin Winder and Tension Bracket Base
259431	16615	Universal Bobbin Winder complete,Nos. 200056E,200082D,200113F,200299H,202478 225368,225381,225444,225453 to 225456 225458,225462,228026,259428 to 259430, two each 225459 and wood screws 3/4 in.,No.12,R.H.B.

KNEE LIFTER

228359	16643	Rock Lever with two 350231C
228360	16643	" " Bracket with 200347C and three wood screws 7/8 in.,No.12
228361	16643	Rock Lever Bracket 228360 with 228359. 228363,228367 and 228386
228362	16643	Rock Lever Extension with 200529C
350231C	16643	" " " Set Screw
228363	16643	" " Hinge Pin
228364	16643	" " Knee Plate with 350231C
228369	16643	" " " " Arm
350231C	16643	" " " " " Set Screw
350231C	16643	" " " " Set Screw
228365	16643	" " Rod
200529C	16643	" " " Set Screw
228386	16643	" " Spring
228367	16643	" " Stop Stud
200347C	16643	" " " " Set Screw
228368	16643	Knee Lifter complete,Nos.228361,228362, 228364,228365 and 228369

(Other Knee Lifter parts are listed with parts of machine head.)

THREAD UNWINDER

No.	Plate	Name
225259	16257	Spool Rest (for one spool) (flat) with 201018C
225257	16257	Spool Rest (for two spools) (flat) with 201018C
150203	16257	Spool Rest Cushion (felt)
225388	16257	" " Rod
200383C	16257	" " " Set Screw
201018C	16257	" " Set Screw
202490	16257	" Stand with 200383C
225391	16257	Thread Guide
201696J	16257	" " Lock Nut
225326	16257	" " Position Cup
225324	16257	" " Rod with 208E and 225322
208E	16257	" " " Screw
225322	16257	" " " Washer
259143	16257	Thread Unwinder (for three spools) complete,Nos.201696J,202490,225257,225259 225324,225326,225388,three each 150203 225391 and wood screws 7/8 in.,No.12

FOOT LIFTER

Parts Required For Changing From Knee Lifter to Foot Lifter

223733	16279	Lifting Lever Extension
200082D	16279	" " " Screw (2)
227561	16279	" " Spring
200835D	16279	" " " Stop Screw

FOOT LIFTER

227952	17620	Lever (left or right) with 227954
227678	17620	" Chain,48 in.long,with 202784
227954	17620	" " Hook (lower)
202784	17620	" " " (upper)
225016	17620	" Hinge Pin
227953	17620	" Stand with two screws 1 in.,No.12
227955	17620	Foot Lifter Lever (left or right) complete,Nos.225016,227678,227952 and 227953

From the library of: Superior Sewing Machine & Supply LLC

GRINDER

No.	Plate	Name
206977	16282	Emery Wheel,2 in.diameter
206962	16282	" " Driving Shaft
201510D	16282	" " " " Nut
204101	16282	" " " " " Washer
206963	16282	" " " " Pulley with two 200403C
200403C	16282	Emery Wheel Driving Shaft Pulley Set Screw
259285	16282	Emery Wheel Guard
200054E	16282	" " " Screw
206969	16282	" " Washer (paper)
206964	16282	Frame with two 54897
54897	16282	" Oil Cup
201070D	16282	Knife Thumb Screw
259484	16282	Slide Bracket with 200394C and 200457D
200457D	16282	" " Adjusting Screw
244073	16282	" " " " Slide Plate
200161H	16282	" " " " " " Screw
200394C	16282	Slide Bracket Set Screw
206967	16282	" " Shaft
202510	16282	" " " Collar with 200141F
200141F	16282	" " " " Set Screw
259485	16282	Throat Plate Knife Cutting Plate Clamp
259289	16282	" " " " " " Spring
201070D	16282	Throat Plate Knife Cutting Plate Clamp Thumb Screw
259486	16282	Grinder complete,Nos.200161H,201510D, 204101,206962 to 206964,206967,206977 244073,259285,259289,259484,259485,two each 200054E,201070D,202510 and 206969

MISCELLANEOUS PARTS

60913	16257	Spool Weight with 60914
60914	16257	" " Center Pin
225377	16257	" Wire (for small spools)
27739	16257	Thread Cone (wood)
225390	16257	" " Holder

16257 - 1/6

259143

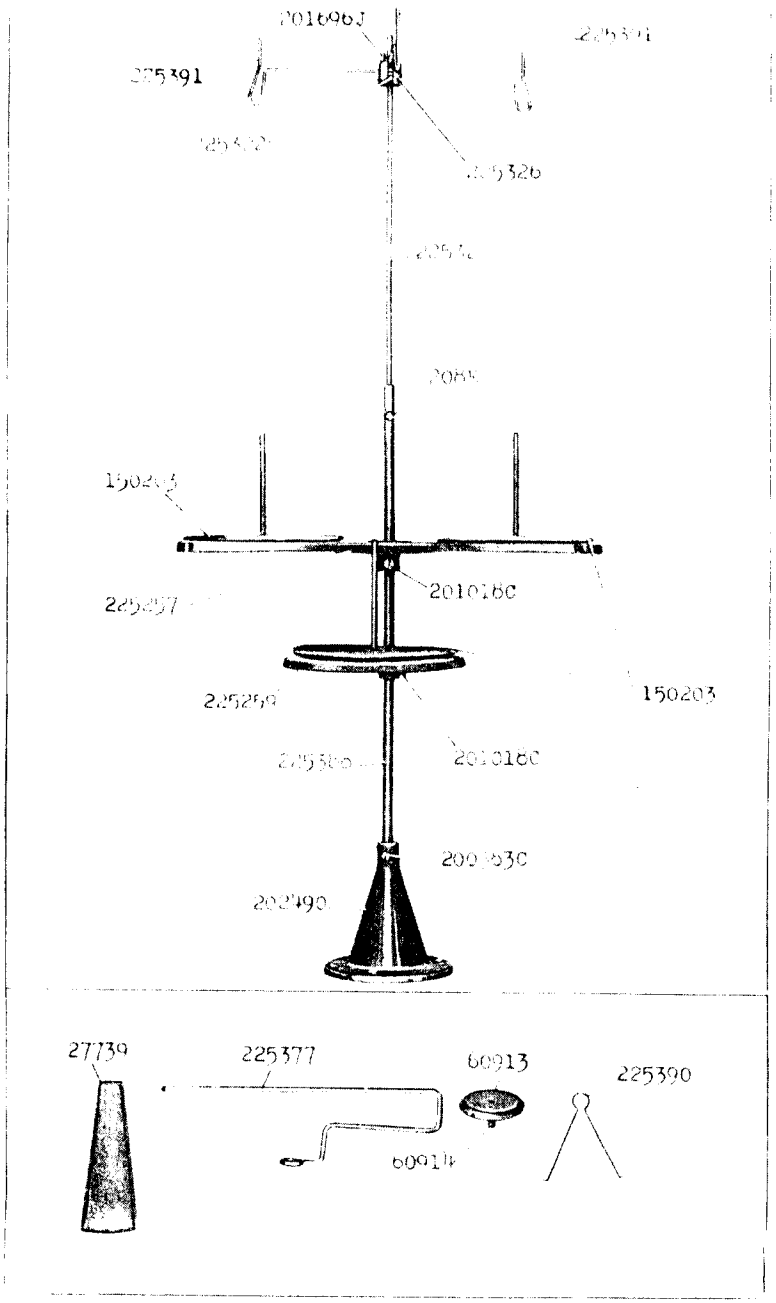

From the library of: Superior Sewing Machine & Supply LLC

16260 - ½

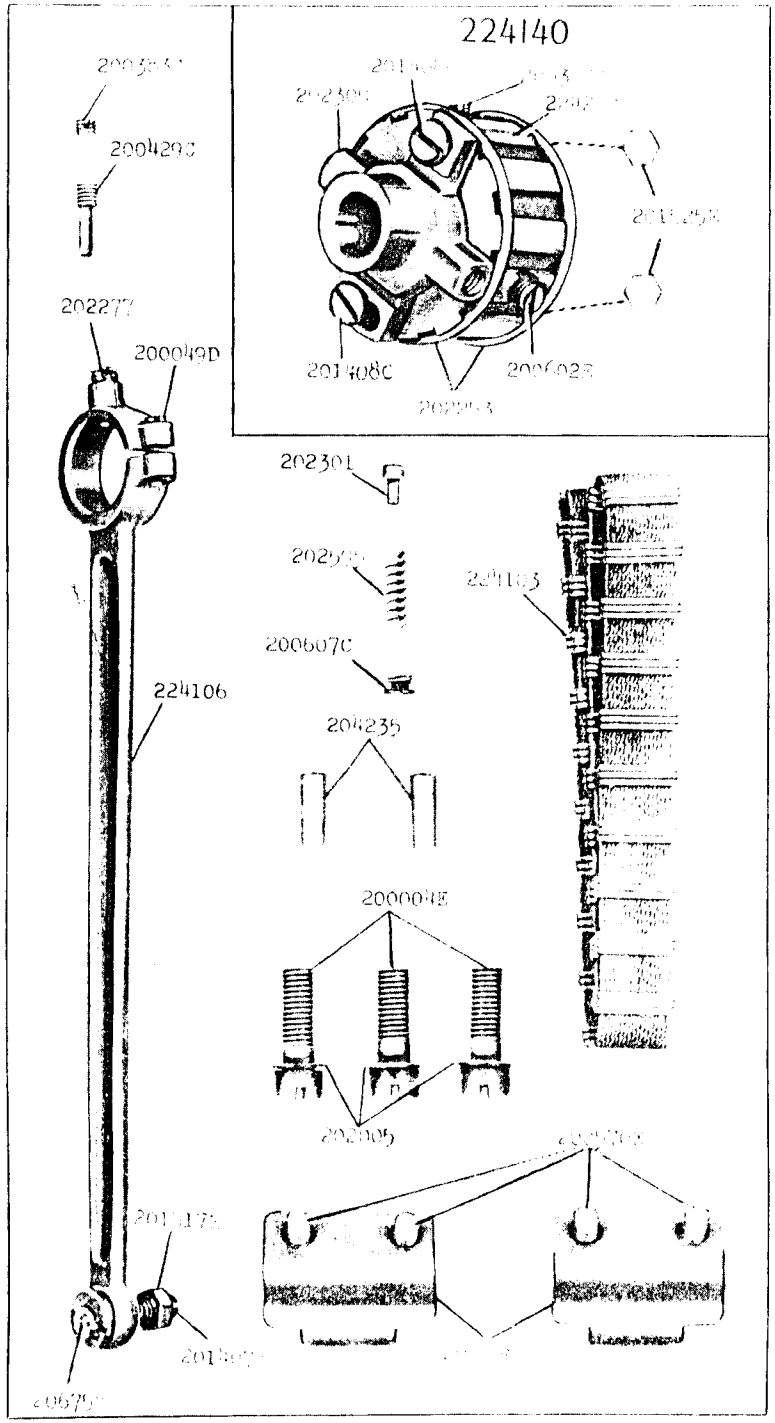

16261 - ½

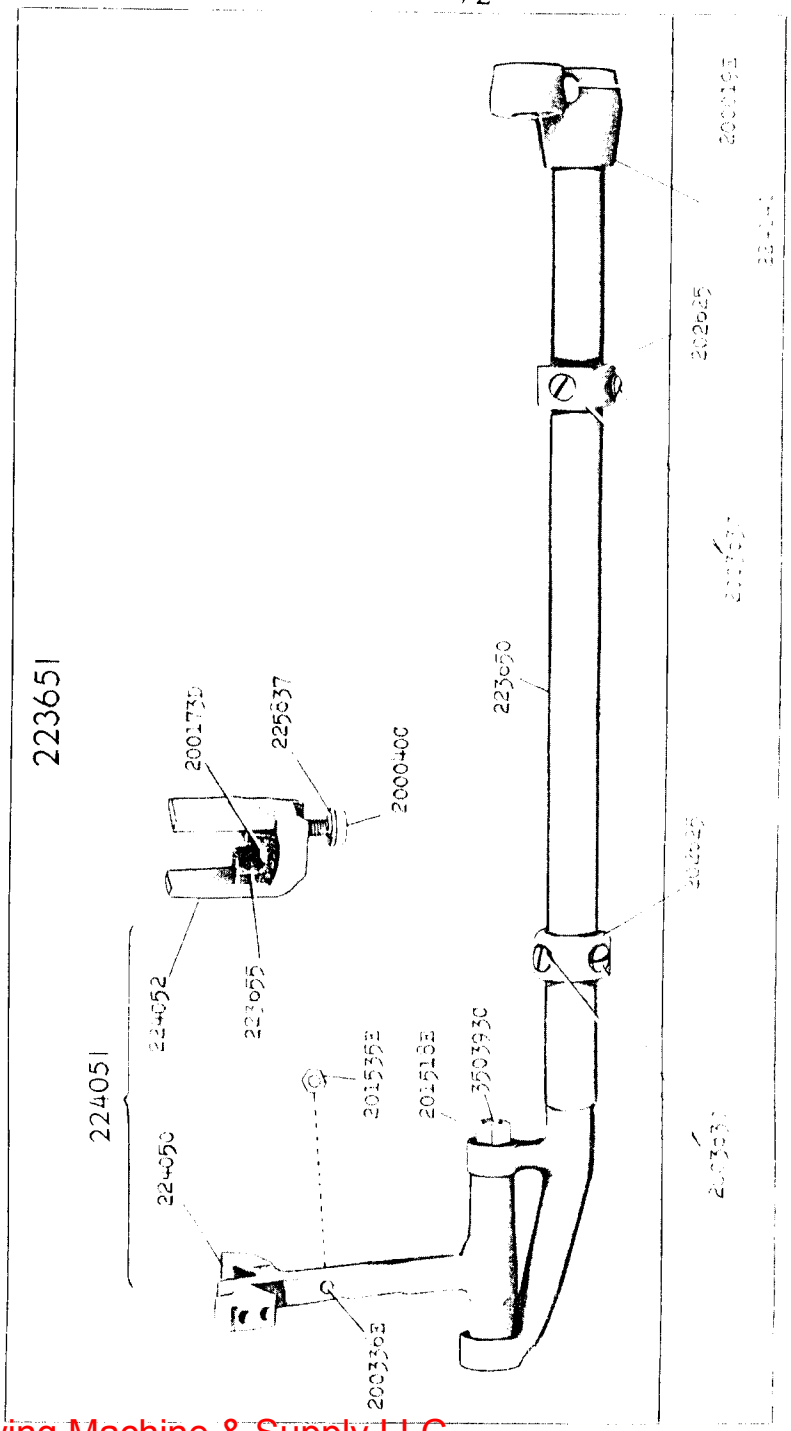

From the library of: Superior Sewing Machine & Supply LLC

16270 - 3/8

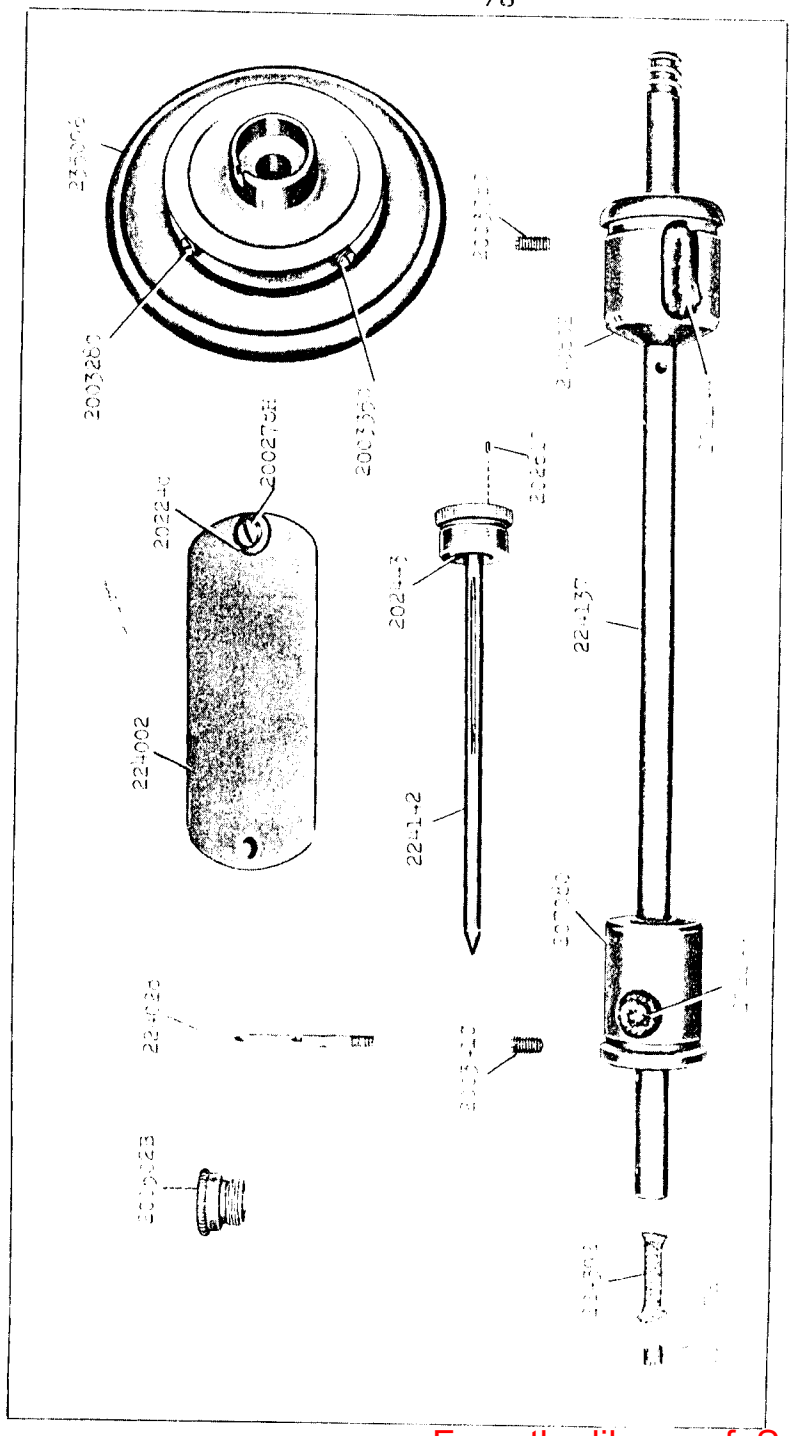

16271 - 3/8

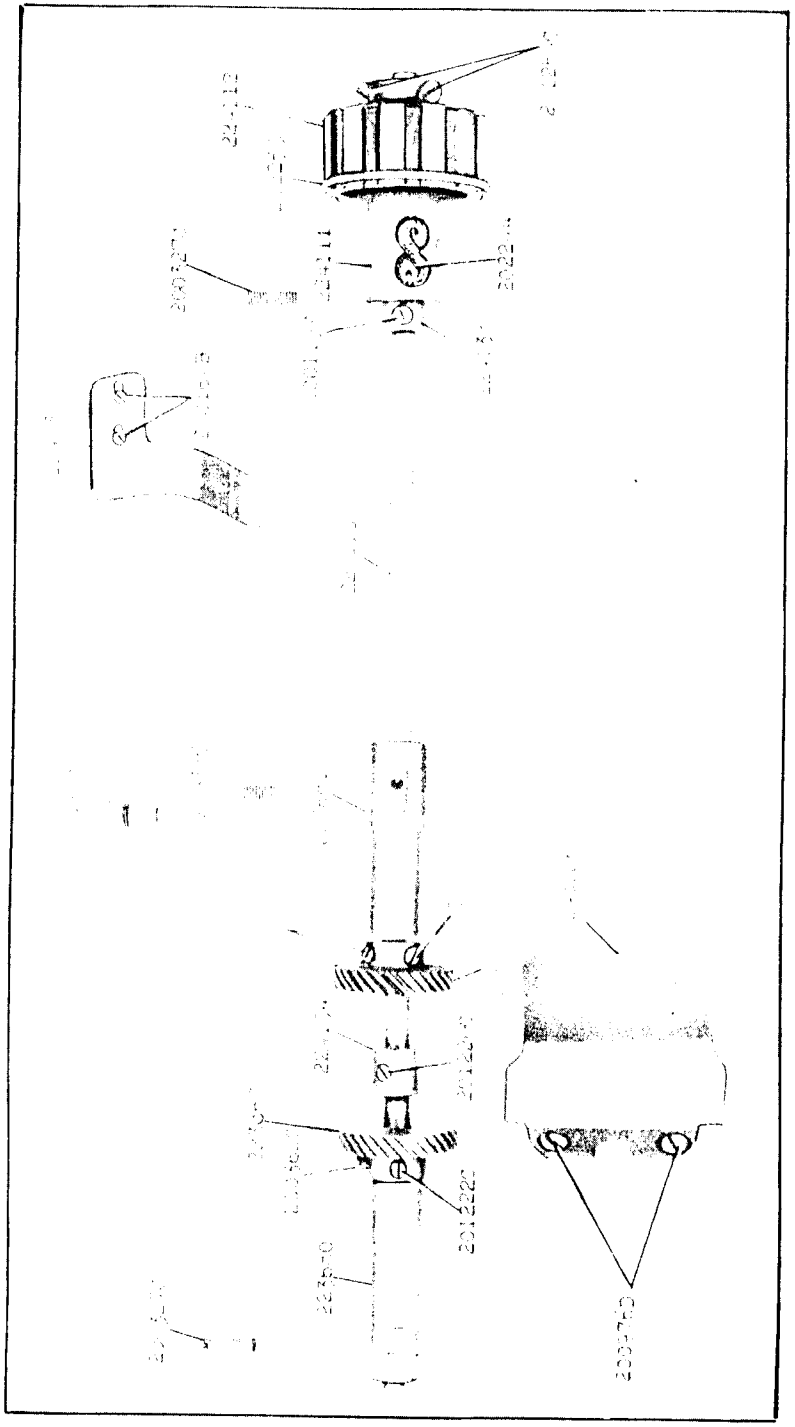

From the library of: Superior Sewing Machine & Supply LLC

16272

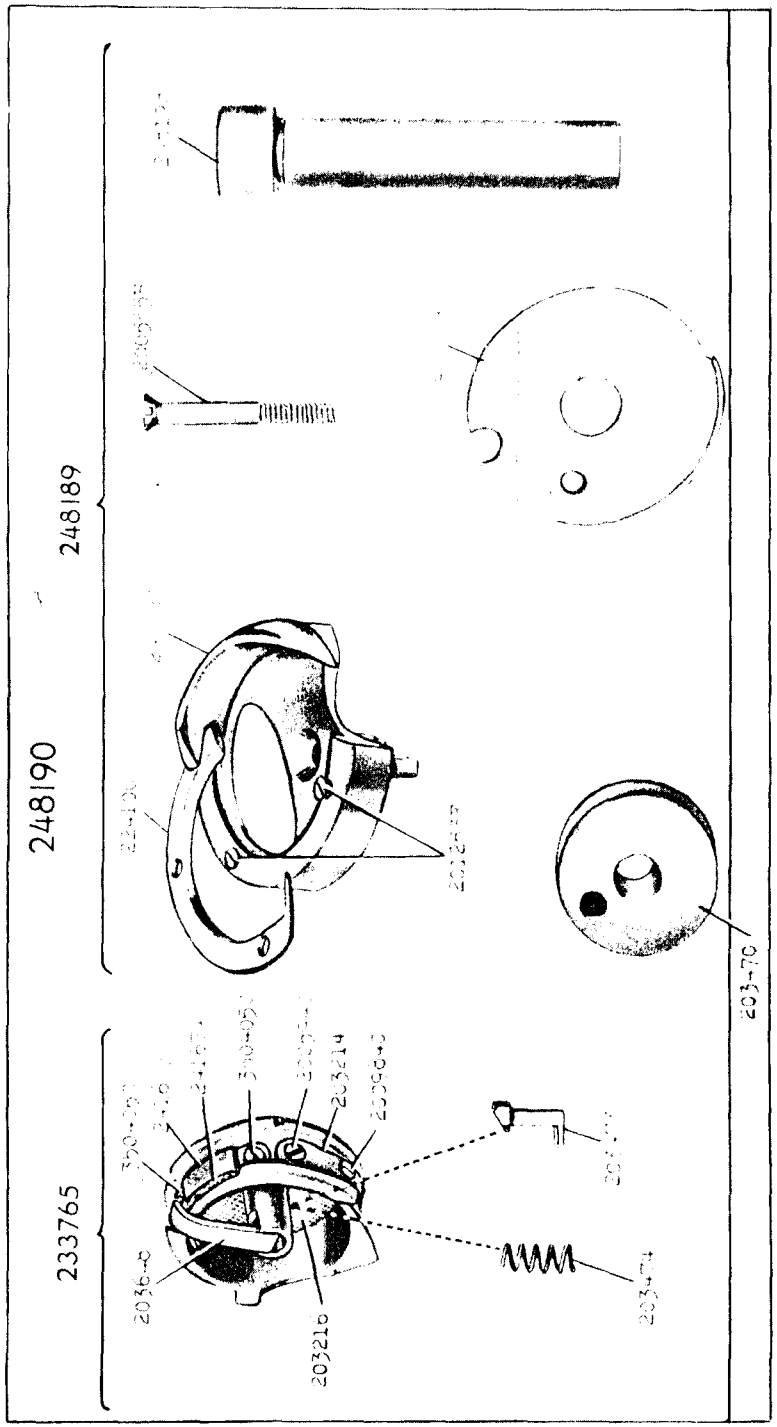

16273

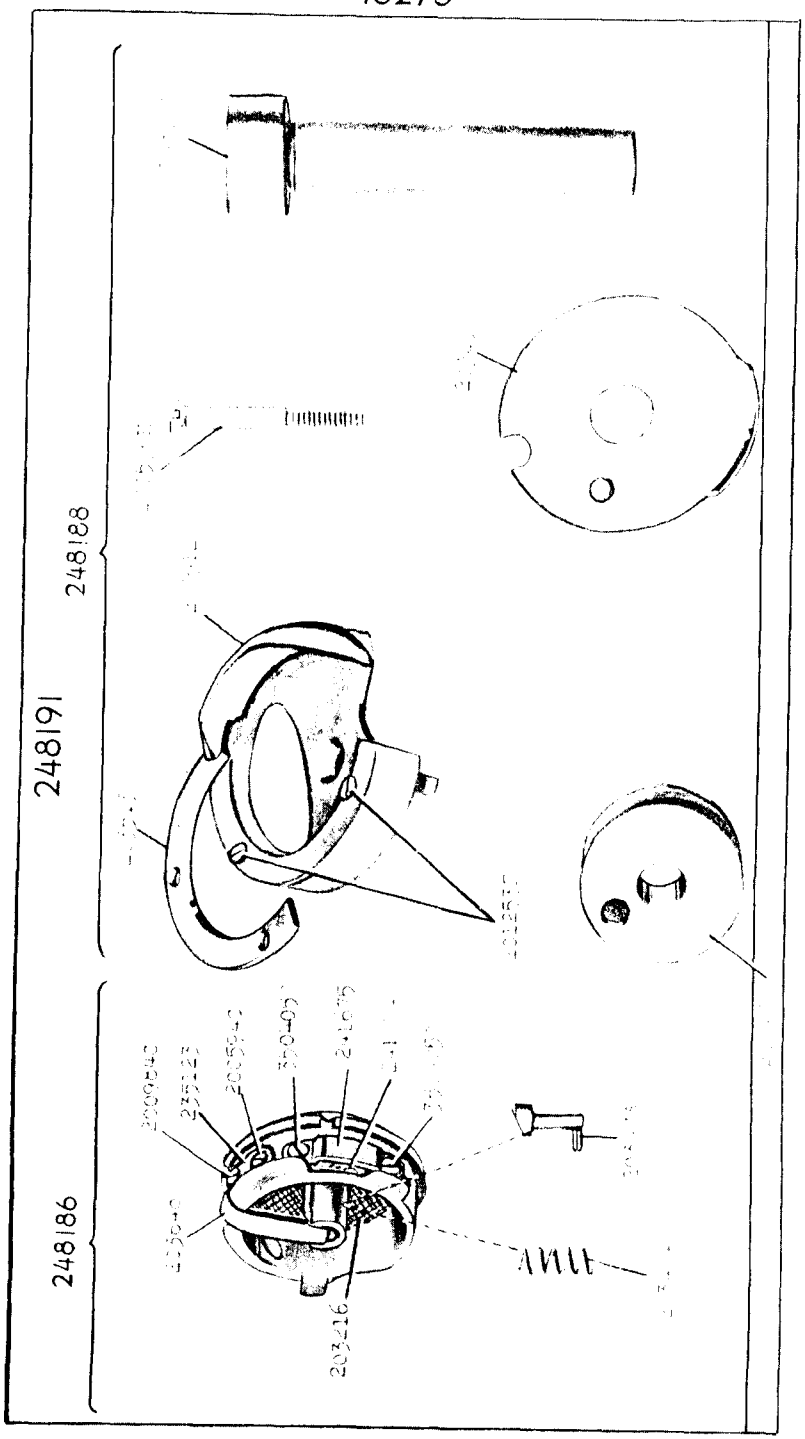

From the library of: Superior Sewing Machine & Supply LLC

16274 - 2/3

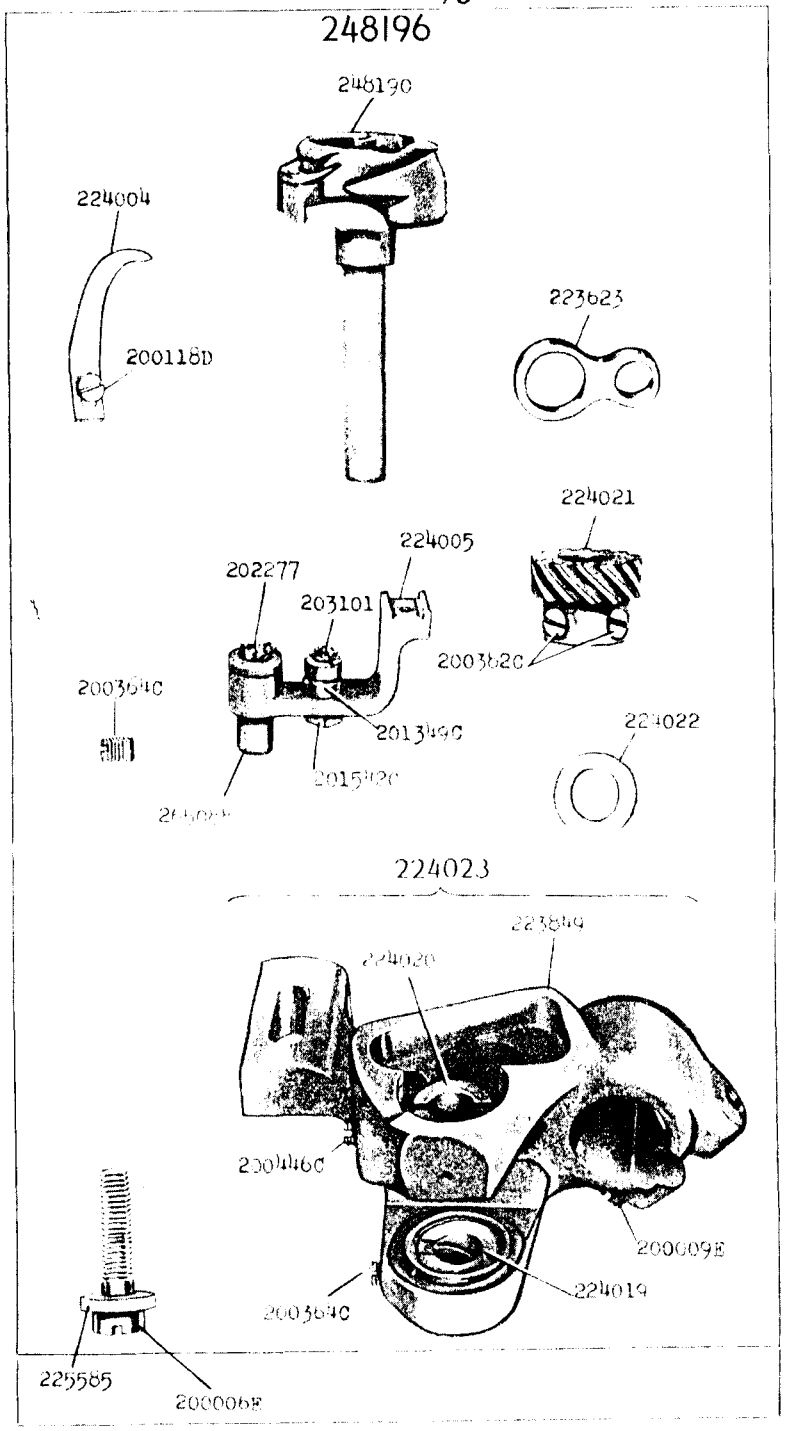

16275 - 2/3

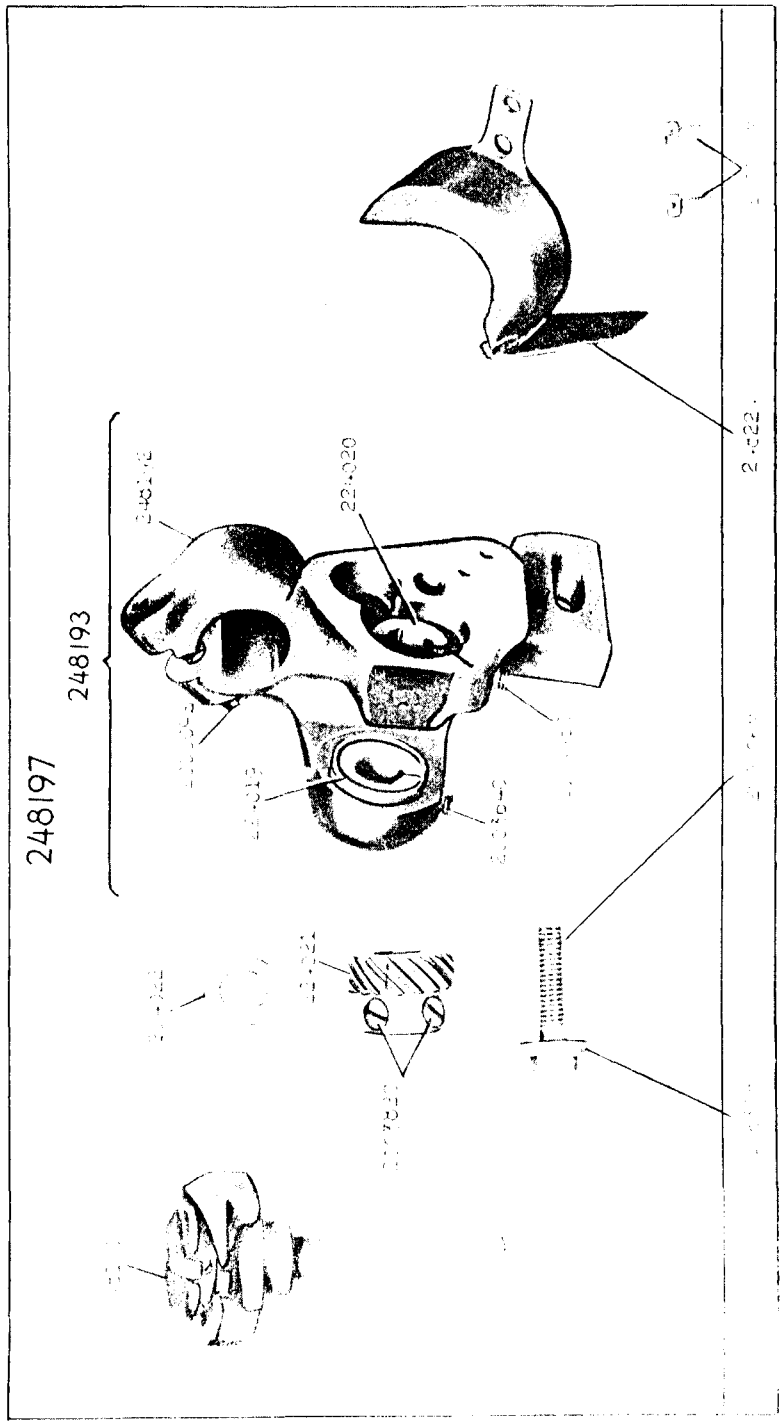

From the library of: Superior Sewing Machine & Supply LLC

16276 - 3/8

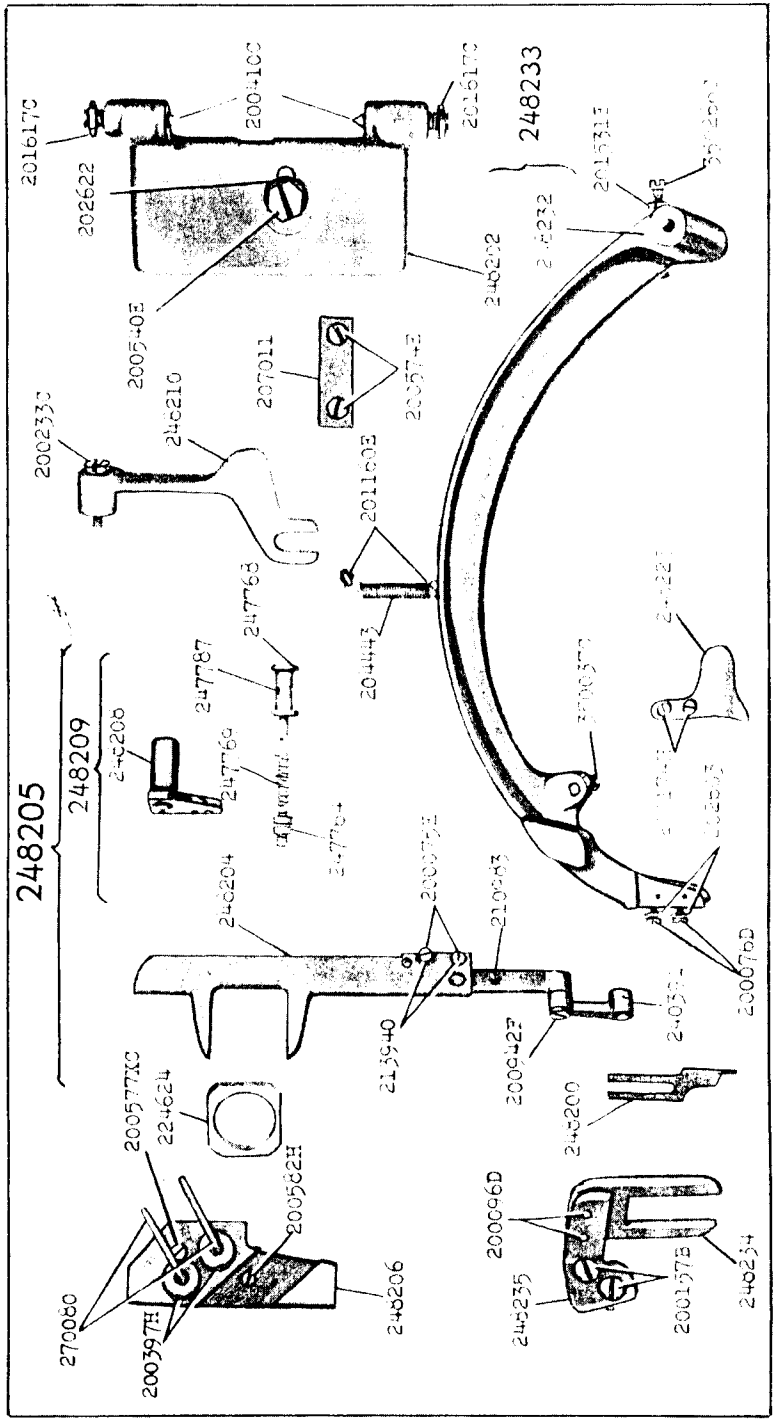

16277 - 1/2

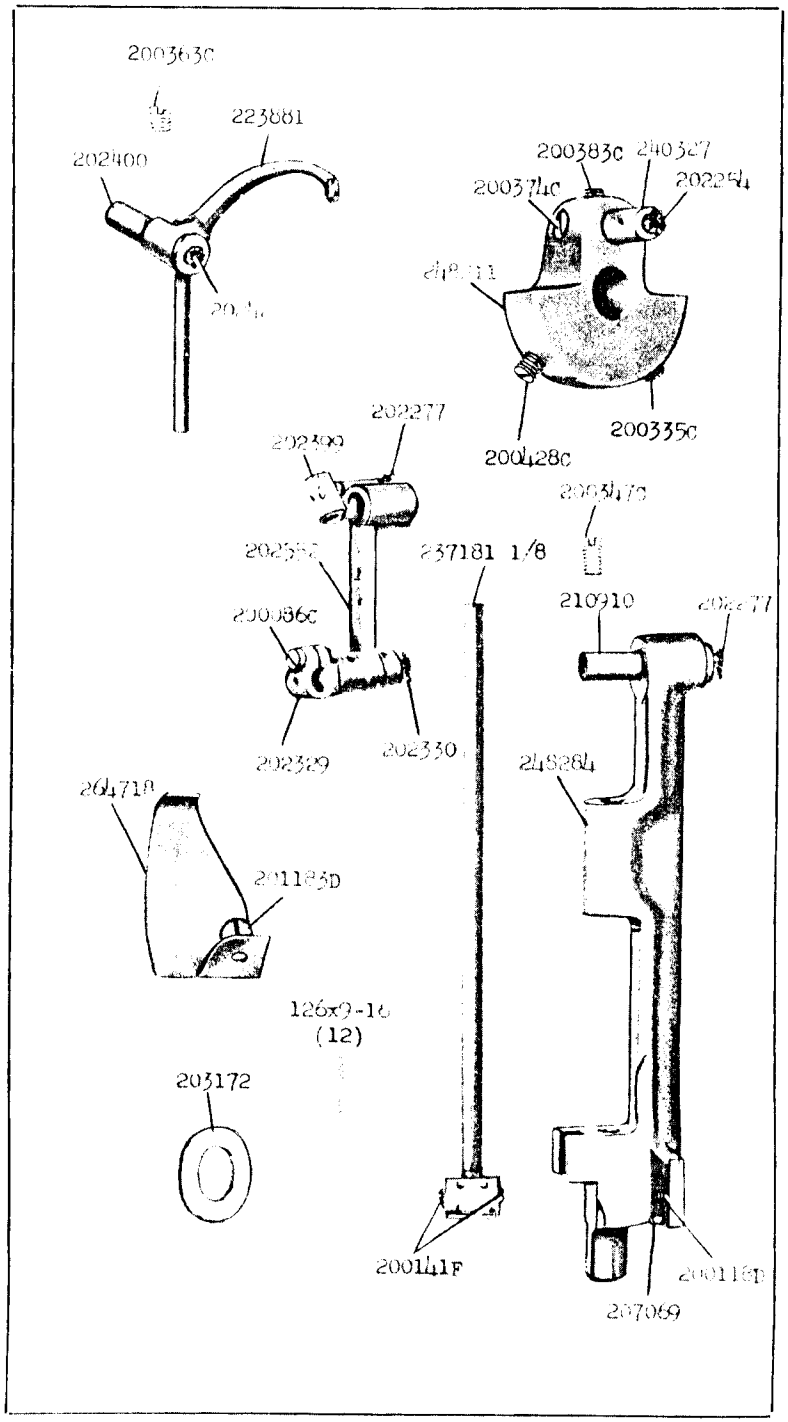

From the library of: Superior Sewing Machine & Supply LLC

16278 - 2/3

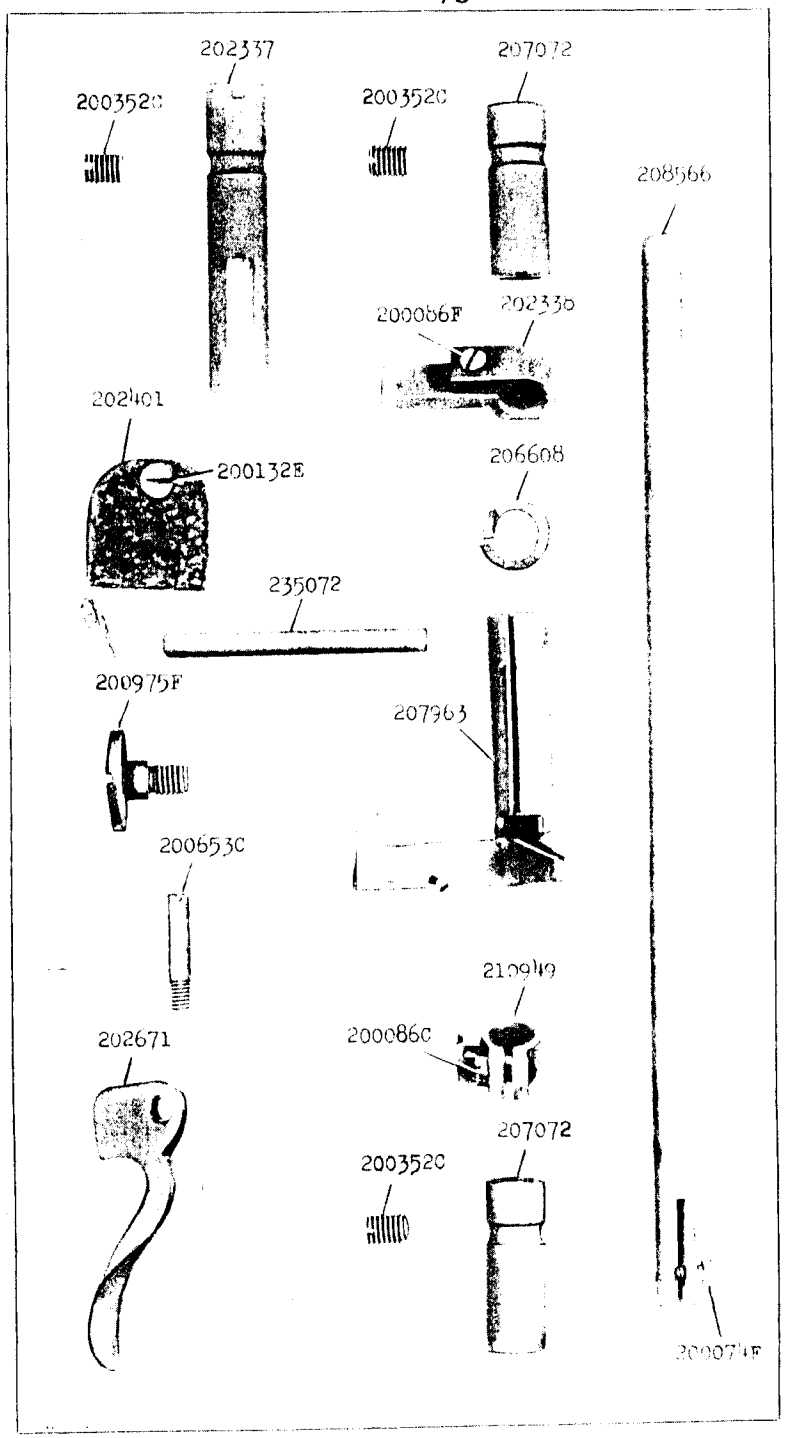

16279 - 1/3

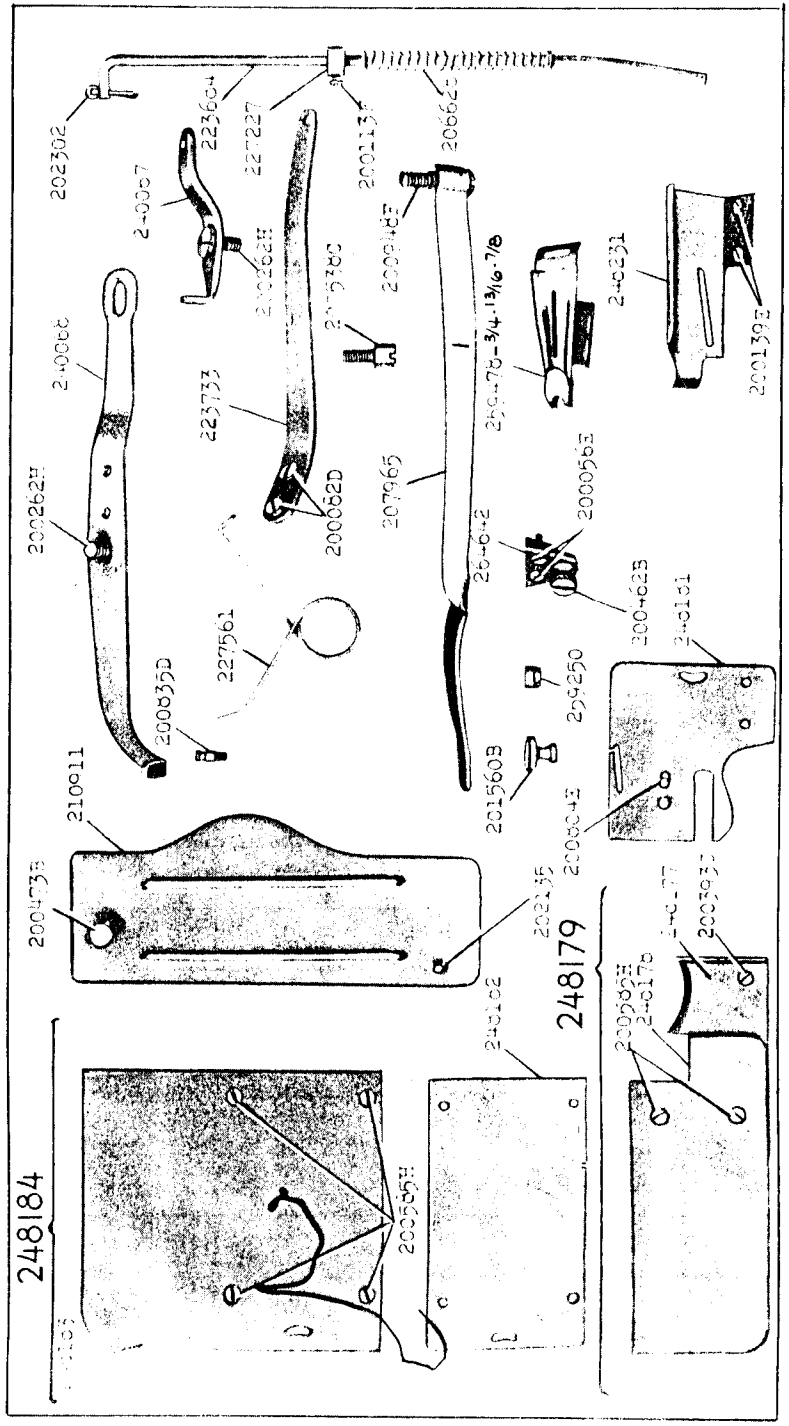

From the library of: Superior Sewing Machine & Supply LLC

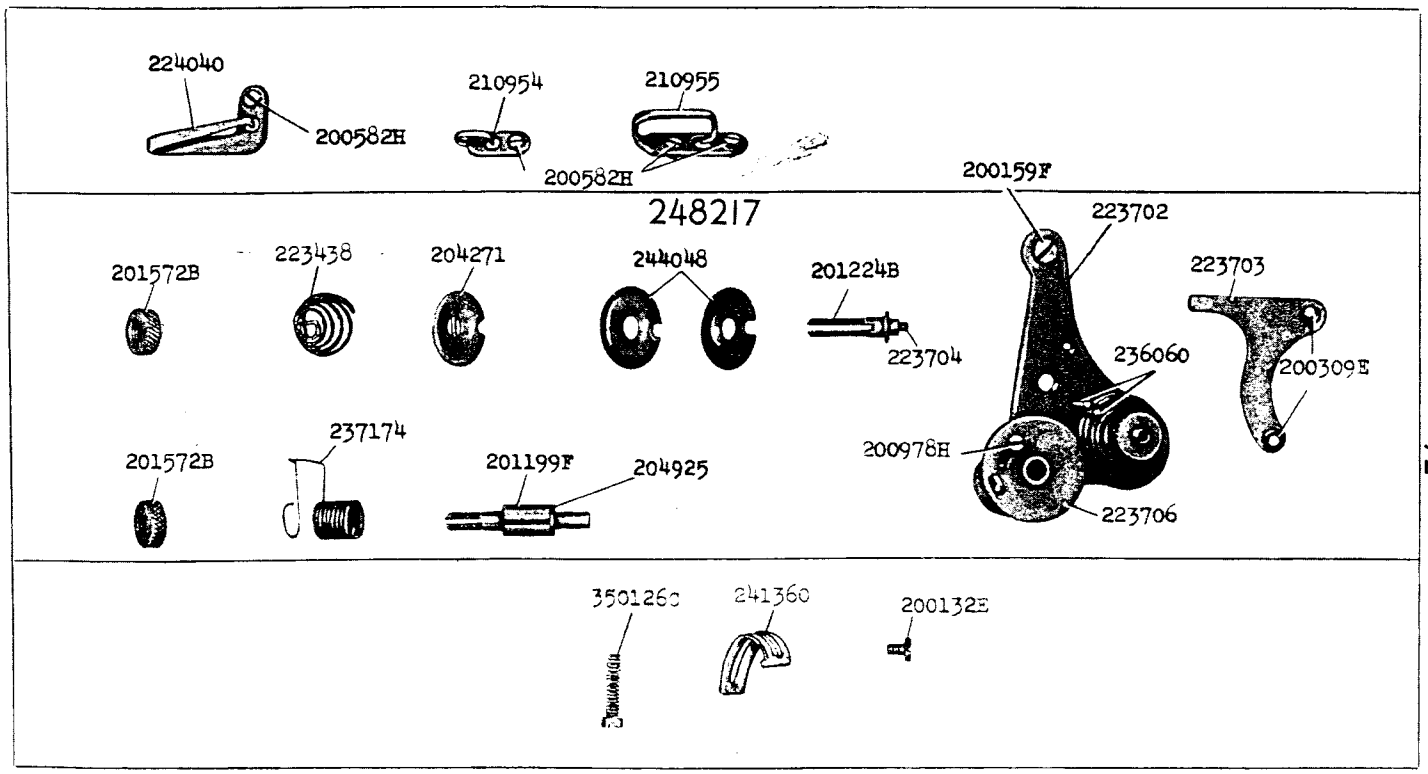

16280 - 1/2

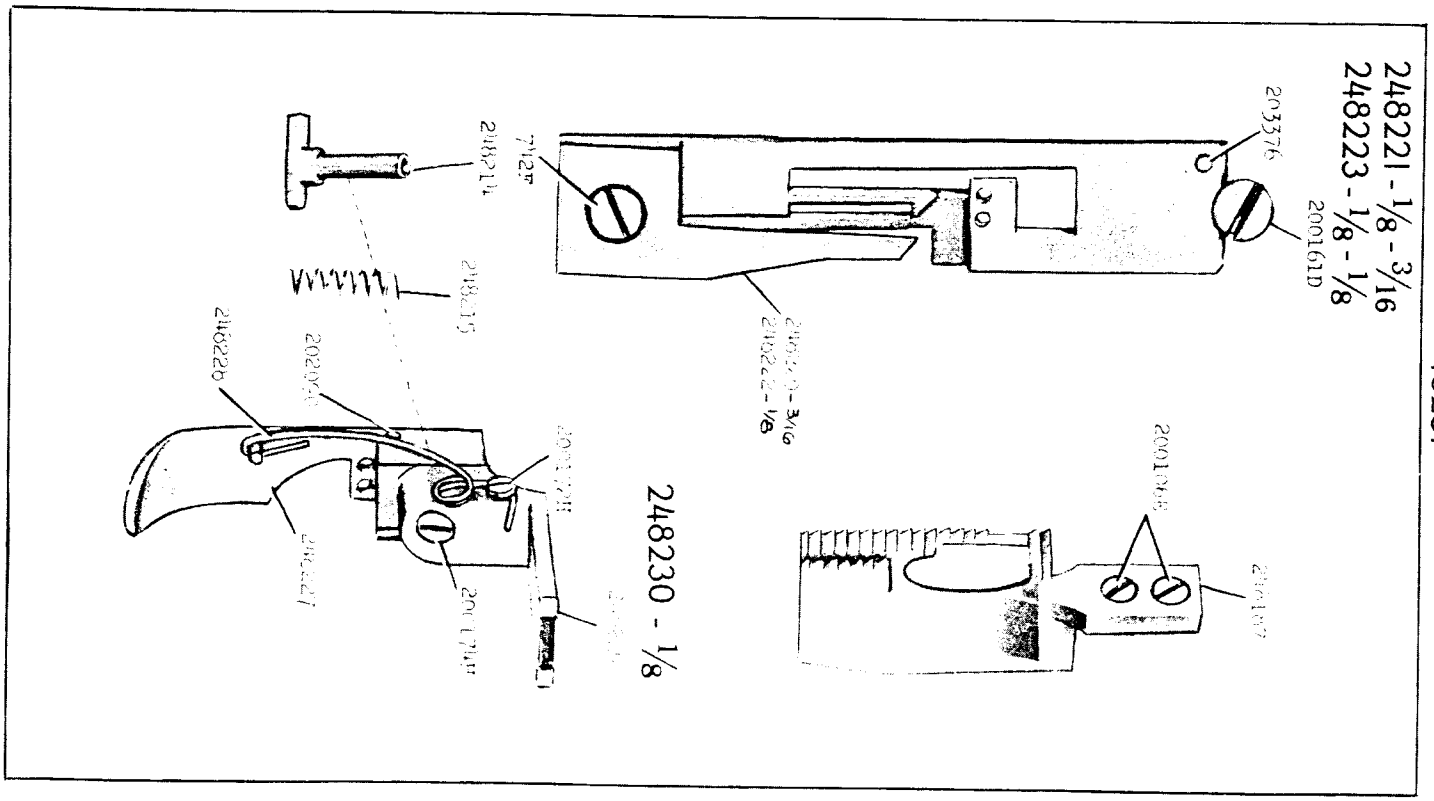

16281

From the library of: Superior Sewing Machine & Supply LLC

16282 - ½

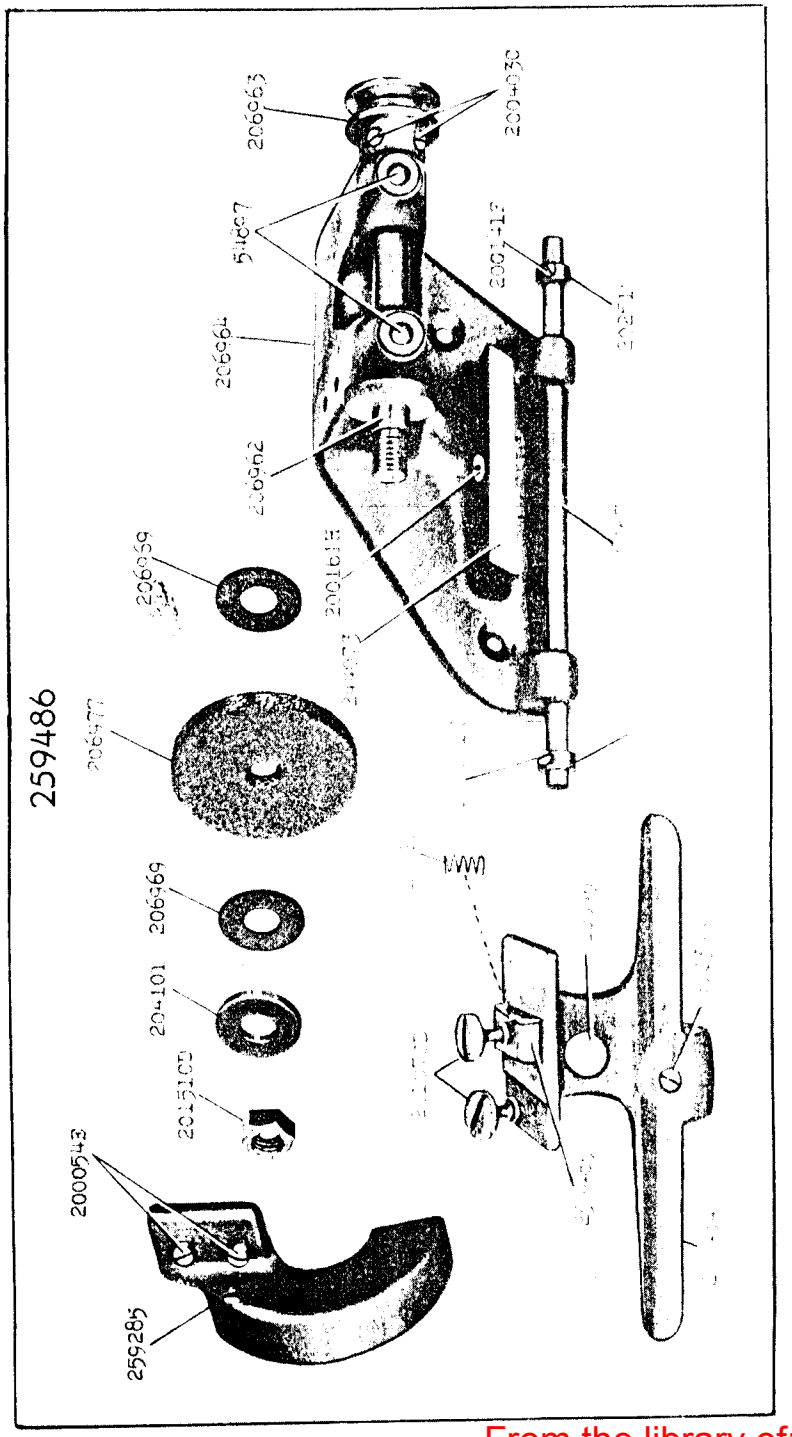

16615 - ½

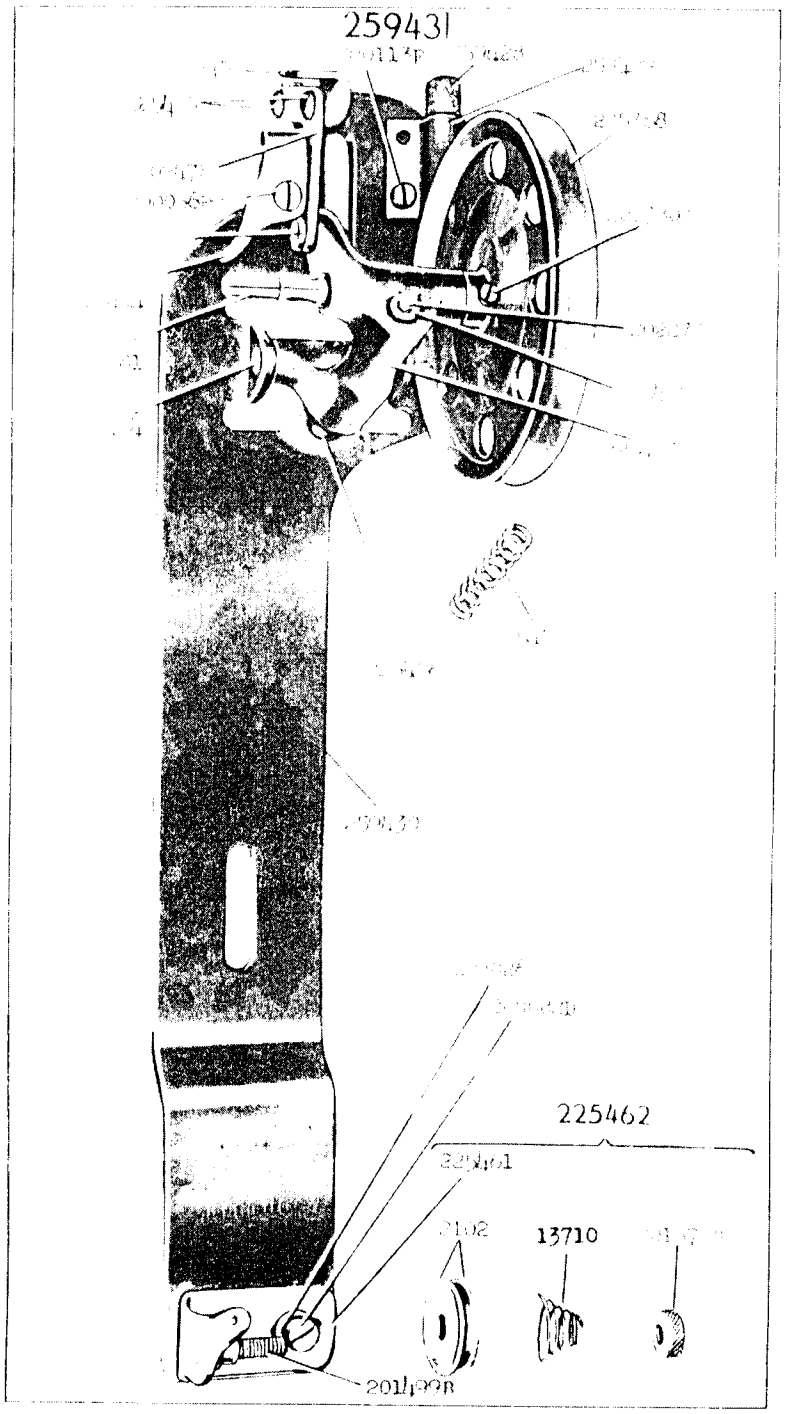

From the library of: Superior Sewing Machine & Supply LLC

16643 - 3/8

228368

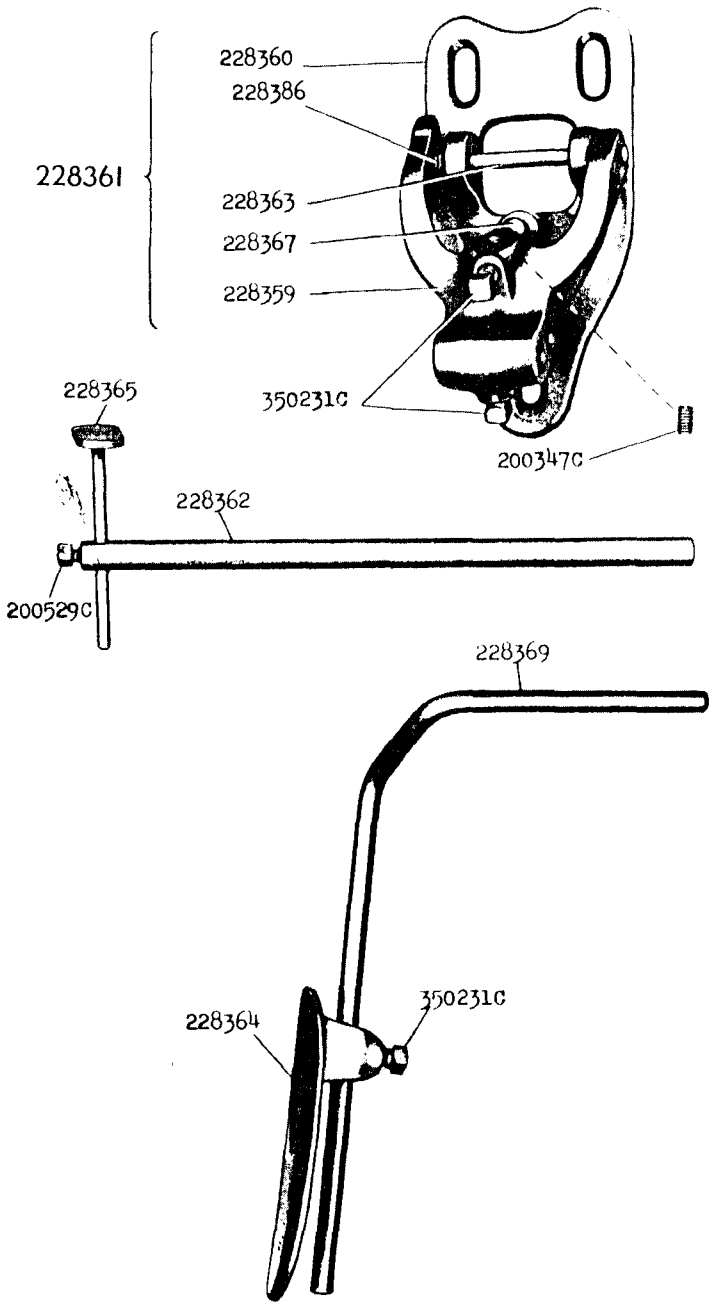

17620 - 1/3

227955

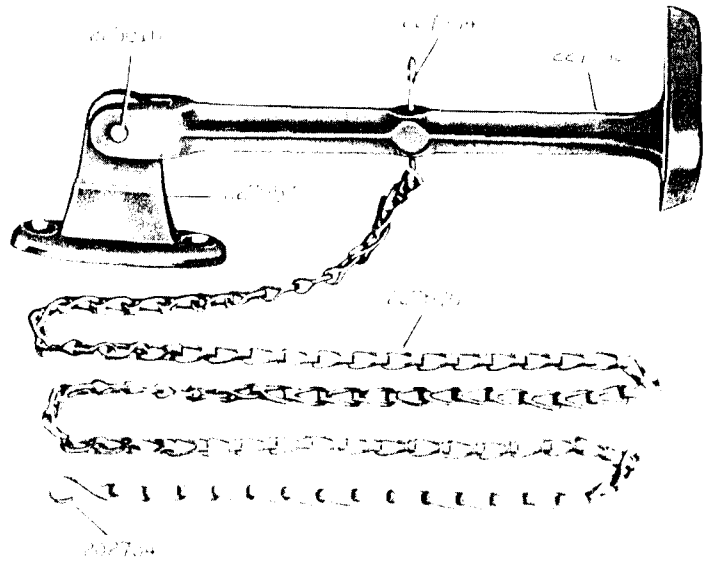

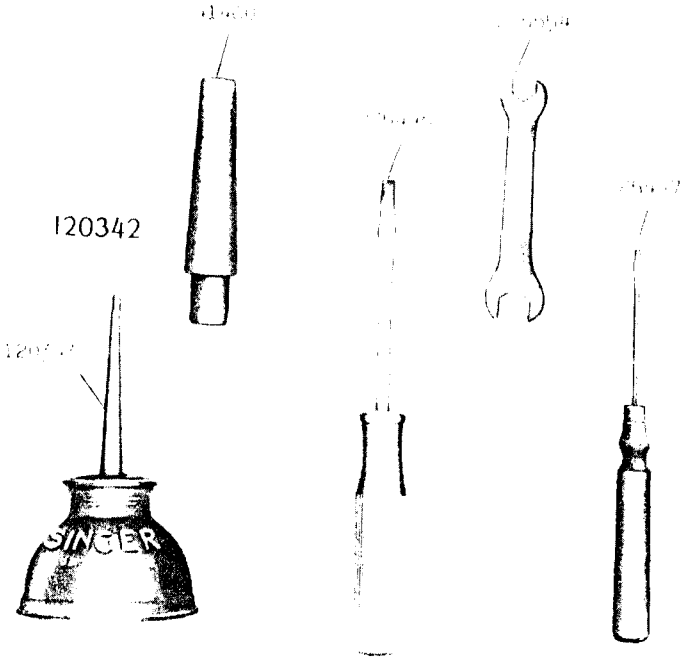

From the library of: Superior Sewing Machine & Supply LLC